ELECTRICAL AND IGNITION

2

C

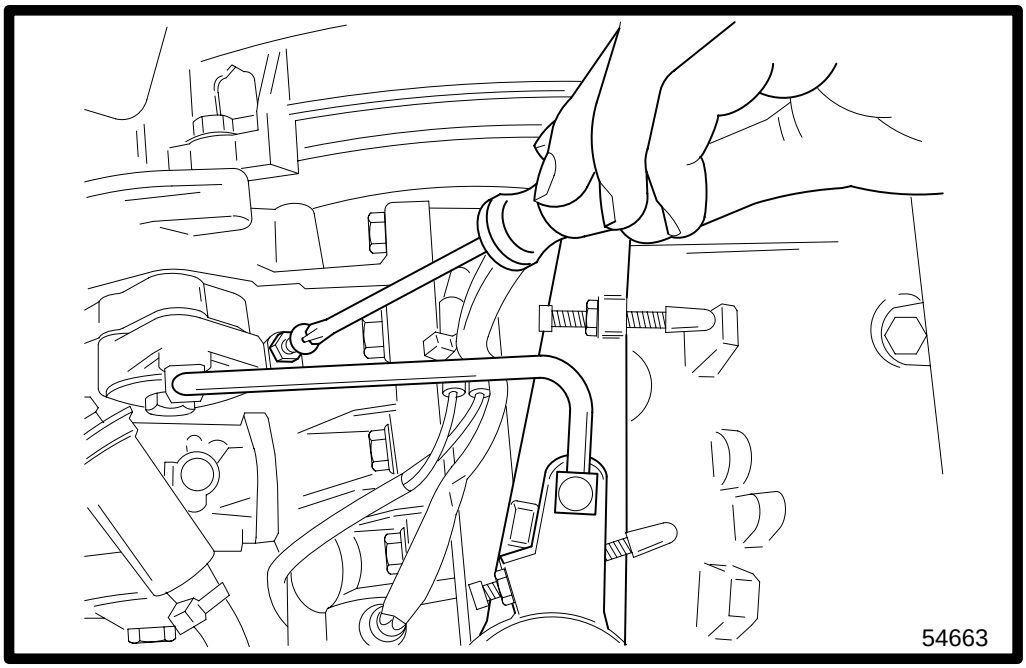

TIMING/SYNCHRONIZING/ADJUSTING

Table of Contents

Timing/Synchronizing & Adjusting

Specifications

Full Throttle RPM Range	5000-5500
Idle RPM (in Forward Gear)	600-700 (3° - 10° ATDC)
Maximum Timing	30° BTDC @ 5500 RPM
Throttle Primary Pick Up	2° BTDC - 2° ATDC
Throttle Secondary Pick Up	30° BTDC
Recommended Spark Plug	NGK BUHW-2
Firing Order	1-3-2-4

Special Tools

Part No.	Description
91-99379	Timing Light
91-59339	Tachometer
91-63998A1	Spark Gap Tester

Timing Adjustments

STATIC TIMING (OUTBOARD NOT RUNNING)

IMPORTANT: On ELECTRIC START MODELS, outboard battery MUST BE FULLY CHARGED when making timing checks. MANUAL START MODELS MUST BE RUNNING in order to make any timing checks.

ELECTRIC START MODELS

1. Remove top cowling.
2. Remove spark plug leads from spark plugs and remove spark plugs from outboard.

NOTE: *Removing spark plugs eliminates possibility of outboard accidentally starting and also allows starter motor to turn outboards over faster thus providing more accurate timing readings.*

3. Install SPARK GAP TESTER (91-63998A1) between No. 1 (TOP) spark plug lead and engine ground.
4. Connect TIMING LIGHT (91-99379) to No. 1 (TOP) spark plug lead.

IMPORTANT: If carburetors were previously removed, it is recommended that they be synchronized prior to making any timing adjustments. Refer to SECTION 3 for proper synchronization procedures.

THROTTLE PRIMARY PICK UP ADJUSTMENT

1. Engage electric starter and advance throttle/spark arm until specified primary pickup timing mark aligns with “V” notch in timing pointer window of flywheel cover.

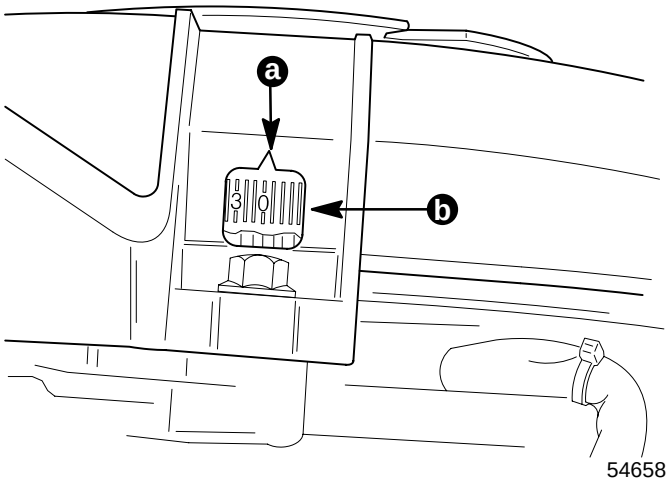

a - “V” Notch
b - Window

2. Hold throttle/spark arm steady and turn IDLE RPM SCREW until it just touches its stop. WHile holding throttle/spark arm against IDLE RPM SCREW STOP, verify specified primary pick up timing mark is still aligned with “V” notch. If timing mark has changed, adjust IDLE RPM SCREW to realign timing mark.

NOTE: *By holding the throttle/spark arm against the IDLE RPM SCREW STOP, a constant timing reference point is provided while adjusting throttle actuator plate.*

IMPORTANT: After all timing adjustments have been made, the IDLE RPM SCREW will have to be readjusted to provide the proper idling RPM for the outboard while it is running.

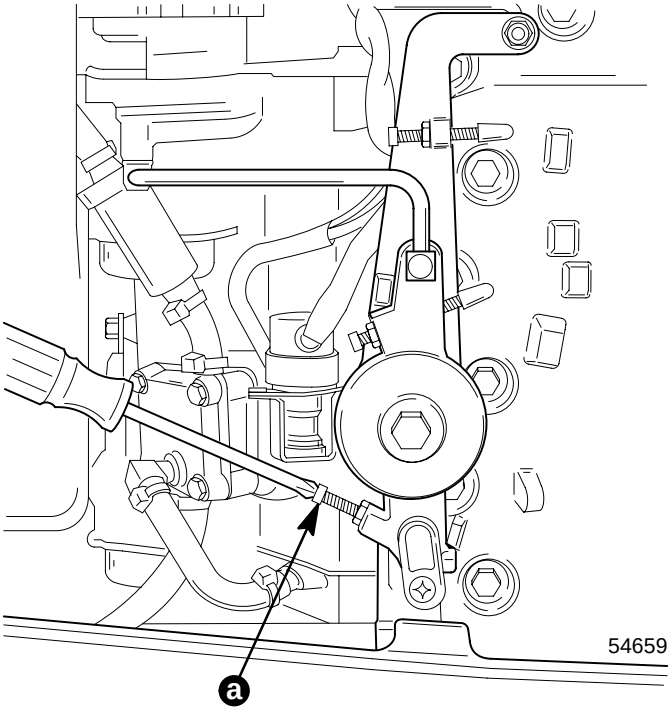

a - Idle RPM Screw

3. Loosen throttle actuator plate retaining screws.

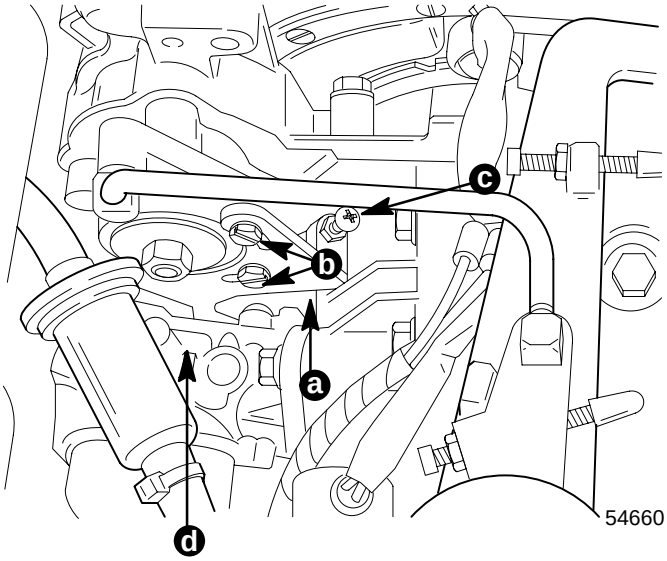

a - Throttle Actuator Plate
b - Retaining Screws
c - Secondary Throttle Pick Up Screw
d - Top Carburetor

4. While holding throttle/spark arm against IDLE RPM SCREW STOP, rotate actuator plate until PRIMARY THROTTLE CAM just touches PRIMARY PICK UP ARM on carburetor cluster. Retighten actuator plate retaining screws.

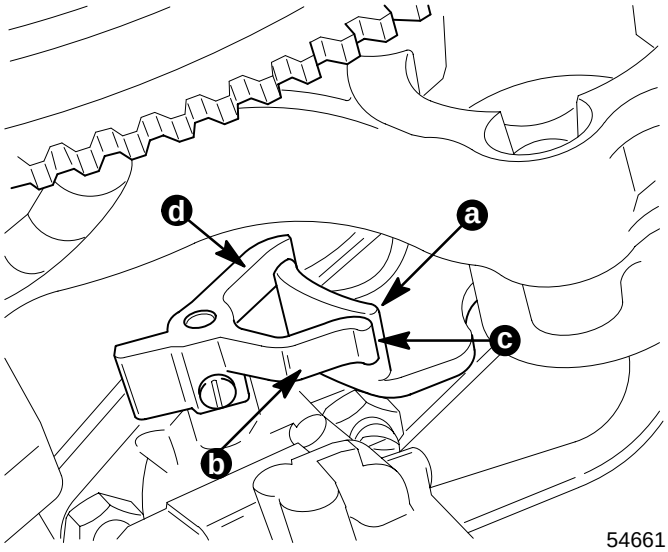

a - Primary Cam
b - Primary Pick Up Arm
c - Just Touching
d - Secondary Lever

MAXIMUM TIMING ADJUSTMENT

1. Advance throttle/spark arm until MAXIMUM SPARK ADVANCE SCREW is against stop. Engage electric starter. If necessary, adjust maximum spark advance screw to align 32° BTDC mark on flywheel with “V” notch in timing pointer window. Tighten locknut.

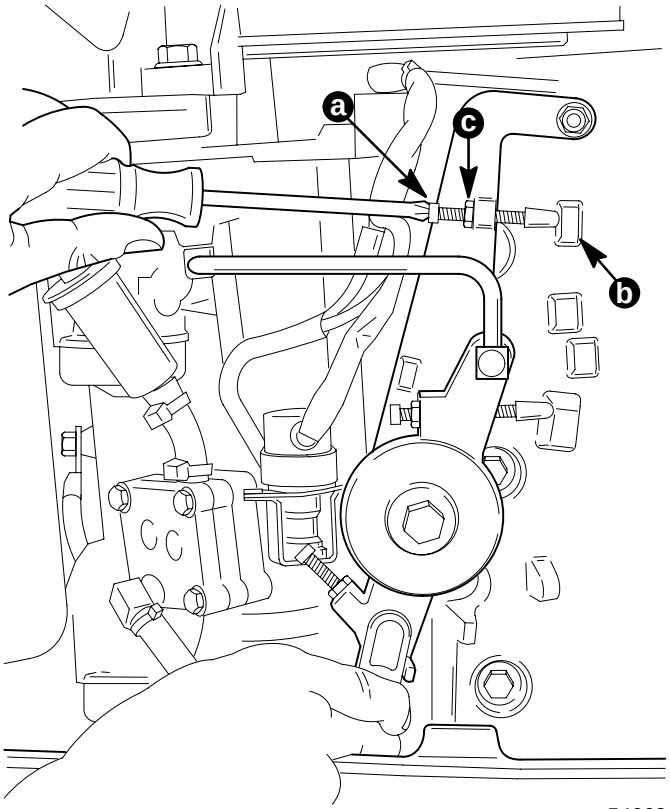

54662

a - Maximum Spark Advance Screw
b - Stop
c - Locknut

IMPORTANT: The advance characteristics of this ignition system are such that the ignition timing will retard itself slightly at wide-open-throttle. Thus, setting maximum timing at 32° BTDC at cranking speed should result in retardation to 30° BTDC at 5500 RPM. Therefore, it is recommended that to be assured of maximum performance from this outboard, all timing adjustments made at cranking speed should be verified with the outboard running.

2. Remove timing light and SPARK GAP TESTER from #1 (TOP) spark plug lead.
3. Reinstall spark plugs. Torque spark plugs to 20 lb. ft. (27.1 N·m).
4. Reconnect spark plug high tension leads to spark plugs.

THROTTLE SECONDARY PICK UP ADJUSTMENT (OUTBOARD NOT RUNNING)

1. With engine not running, advance outboard throttle lever to hold maximum spark advance screw against stop. Adjust secondary throttle pick up screw so that end of screw just touches secondary lever of carburetor cluster. Tighten lock nut.

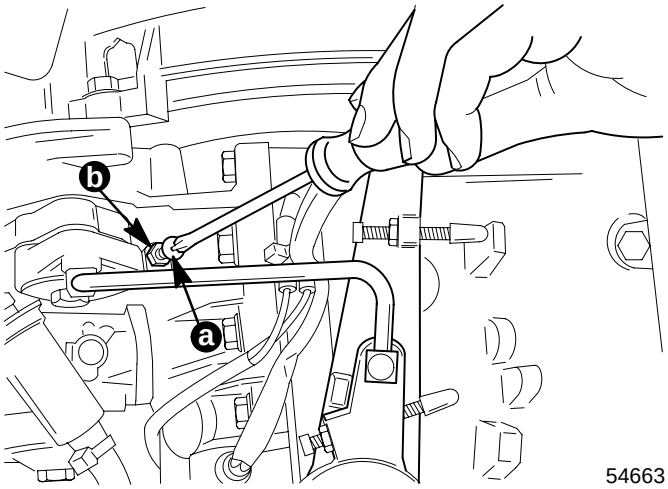

54663

a - Secondary Throttle Pick Up Screw
b - Lock Nut

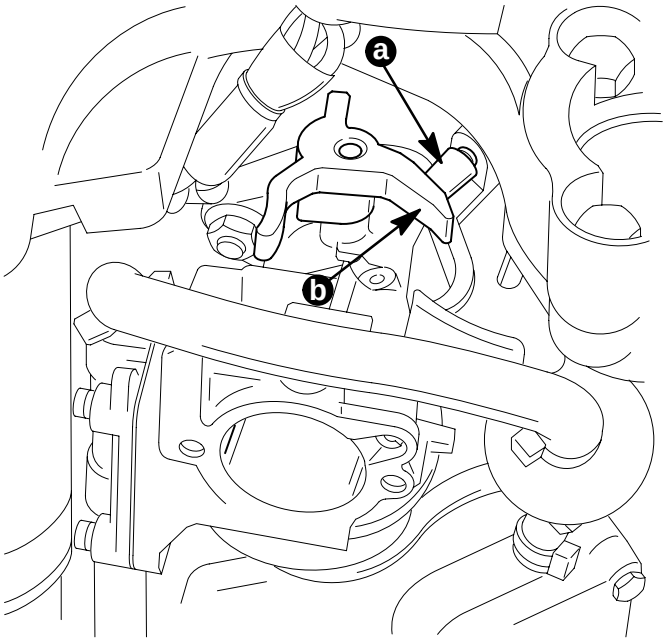

54664

a - Secondary Throttle Pick Up Screw
b - Carburetor Cluster, Secondary Cluster

FULL THROTTLE STOP SCREW ADJUSTMENT (OUTBOARD NOT RUNNING)

1. Advance throttle lever to hold full throttle stop screw against stop.

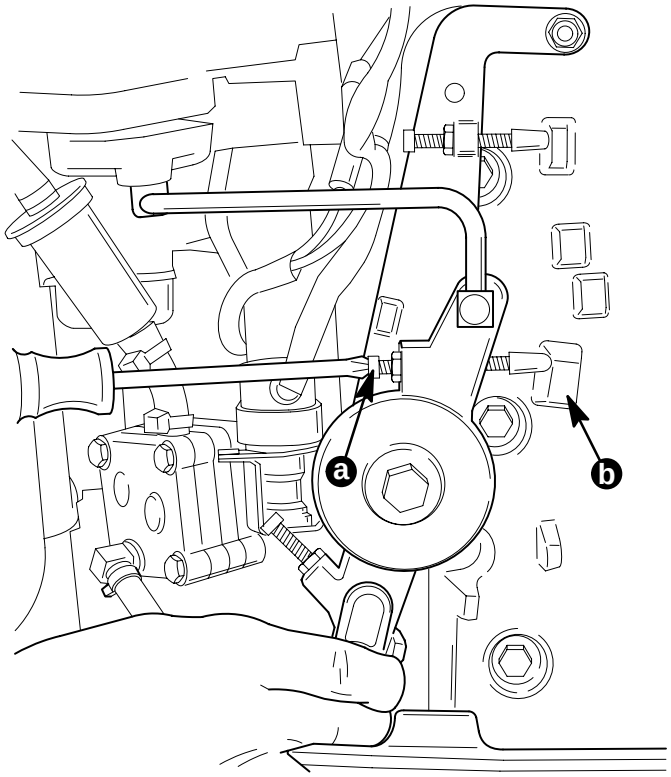

54665

a - Full Throttle Stop Screw
b - Stop

2. Adjust full throttle stop screw to allow full carburetor shutter opening at wide-open-throttle. Throttle shutters MUST NOT act as a throttle stop. .010” - .015” (0.254mm - 0.381mm) free play should exist between secondary pick up screw and carburetor cluster secondary lever. If sufficient free play does not exist, full throttle stop screw MUST BE adjusted.

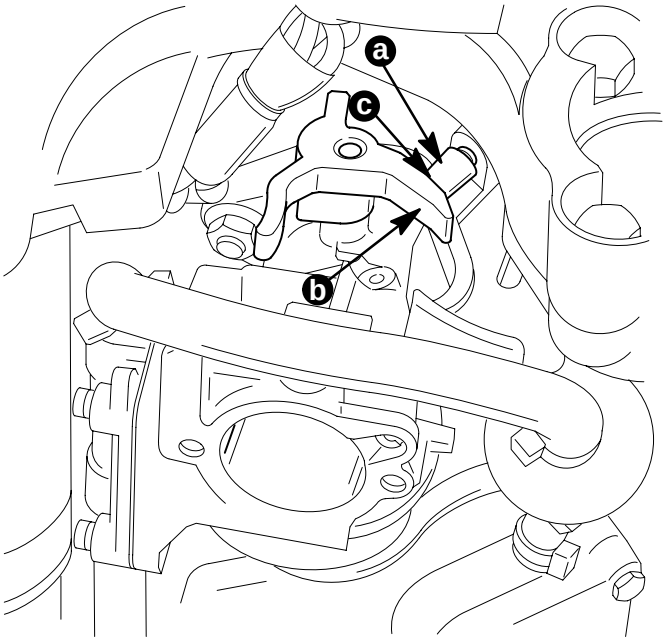

54664

a - Secondary Pick Up Screw
b - Carburetor Cluster Secondary Lever
c - .010 in. - .015 in. (0.254mm - 0.381mm) Clearance

Carburetor Adjustments

IDLE MIXTURE SCREW ADJUSTMENT

1. With outboard in test tank or boat and outboard in water, preset carburetor idle mixture screw at 1-1/4 turns out from a lightly seated position.

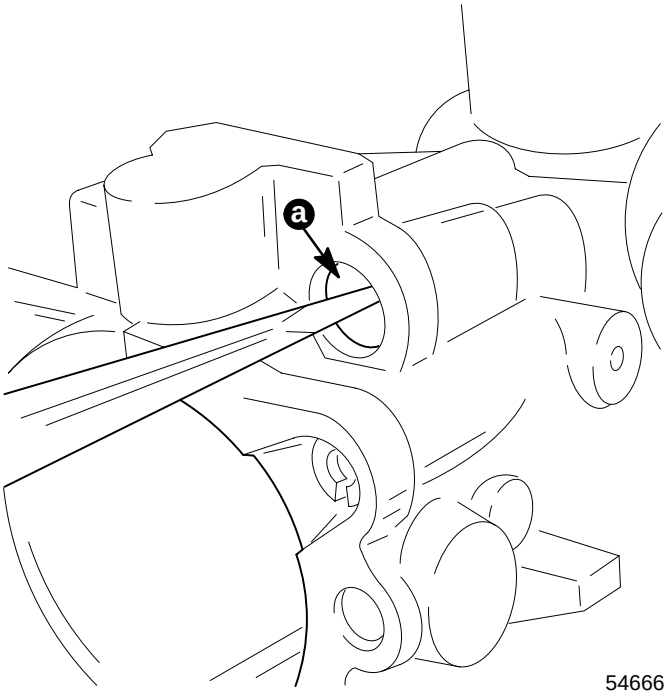

a - Idle Mixture Screw

2. Start outboard and allow to warm up for approximately five minutes.
3. With outboard running, shift into forward gear. Slowly turn idle mixture screw counterclockwise until the corresponding cylinders start to load up or fire unevenly due to an over-rich condition.
4. Slowly turn idle mixture screw clockwise until the cylinders fire evenly and engine picks up speed.
5. Continue turning screw clockwise until too lean a mixture is obtained (outboard slows down and misfires).
6. Set idle mixture screw at a point midway between TOO RICH and TOO LEAN. When in doubt, set slightly RICH rather than TOO LEAN.
7. Do not adjust leaner than necessary to attain reasonably smooth idling. TOO LEAN a mixture is a major cause of hard starting.

IDLE RPM ADJUSTMENT

1. Place outboard in test tank or boat and outboard in water.
2. Start outboard and allow to warm up for approximately five minutes.
3. With outboard running, shift into forward gear and adjust idle RPM as follows:
   a. Remove throttle cable barrel from barrel retainer. Adjust idle RPM screw to attain an idle speed of 600 to 700 RPM with outboard running in forward gear. Retighten nut on adjusting screw.

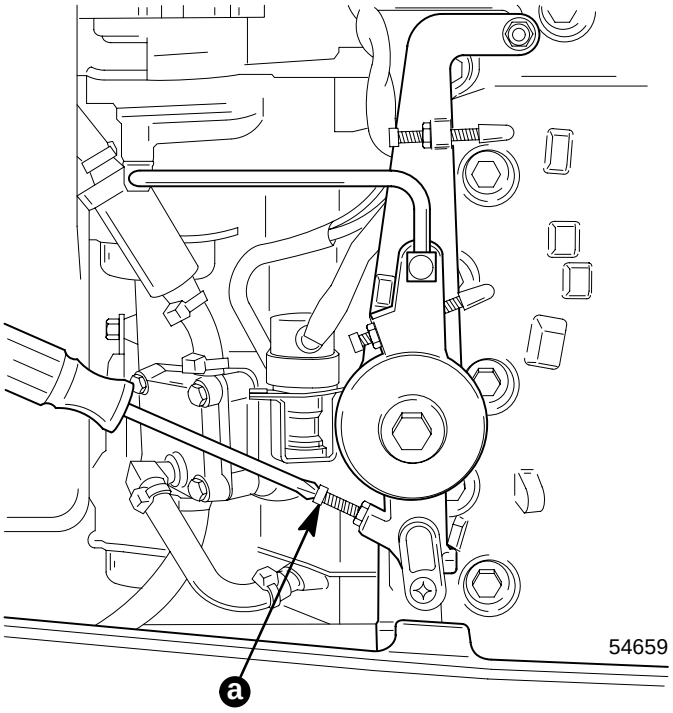

a - Idle RPM Screw

   b. With end of throttle cable connected to throttle lever, hold throttle lever against idle stop. Adjust throttle cable barrel to slip into barrel retainer on cable anchor bracket with a very light preload of throttle lever against idle stop. Lock barrel in place.
   c. Check preload of throttle cable by placing a thin piece of paper between idle stop screw and idle stop. Preload is correct when paper can be removed with some drag but without tearing. Readjust cable barrel if necessary.

IMPORTANT: Excessive preload on throttle cable will cause difficult shifting from FORWARD to NEUTRAL. Readjust throttle cable if necessary.